2013 Model Frameset

OWNERS MANUAL

Do not operate your Foes Frameset or Turnutt Shock until you have fully read this manual

WHAT FOES WILL DO UNDER THE WARRANTY

Foes will repair or replace any part that is determined by Foes to be covered by this warranty. This limited warranty is made ONLY to the original owner and is not transferable. All claims must be made through an Authorized Foes Dealer, and must be accompanied by the original bill of sale or proof of purchase that identifies the bicycle frame by serial number. The original owner is responsible for this and any and all labor and transportation charges associated with the warrantied repair or replacement of parts, even if Foes determines that it is under warranty.

WHAT IF YOUR FRAME IS NOT COVERED

If the warranty claim on your Foes frame is determined to be invalid, Foes Racing will offer a replacement frame/swingarm/part of at least equal value at a reduced price. This transaction will be offered only through an Authorized Foes Dealer, and under the following conditions: the frame has been registered with Foes Racing; the Frame is the property of the original purchaser; the owner provides a valid sales receipt. This crash replacement is only available to the original owner, and, for a time period of three years from the original purchase date. The replacement frame must be assembled by an Authorized Foes Dealer to maintain the Foes warranty. All freight charges associated with the crash replacement are the responsibility of the original owner.

FOES FRAMES SHOULD BE INSPECTED PERIODICALLY BY A FOES DEALER

We cannot stress enough that building-up a pro-level frame is not an endeavor recommended for home mechanics. Special tools and skills accumulated over time are needed to accomplish this successfully, and your dealer can answer 99% of all the questions related to the complete build of a high-end frameset. Due to this fact, this manual covers only the most elemental information.

USEFUL PRODUCT LIFE

Every Foes Frameset has a useful product life. The length of this product life will vary with the construction and materials of the frame or fork, the maintenance and care the frame and fork receives over its useful product life, and the type and amount of use the frame or fork is subject to. Users in competitive events, trick riding, jumping, ramp jumping, aggressive riding, riding on severe terrain, riding in severe climate or weather, ...continued

riding with heavy loads, commercial activities, and other types of non-standard use can dramatically shorten the useful life of the Foes Frame or Fork. Any one or a combination of these factors and conditions may result in an unpredictable failure of a Foes Frame or Fork that would not be covered by warranty. ALL FOES FRAMES, FORKS, AND SHOCKS SHOULD BE PERIODICALLY CHECKED BY A RETAIL OUTLET OR A FOES DEALER for indicators of stress and/or potential failure, including cracks, deformation, corrosion, paint peeling, dents, and any other indicators of potential problems. These are important safety checks, and may be very important to help prevent accidents, bodily injury to the rider, and a shortened life of the Foes frameset or fork. THIS IS AN INTEGRATED AND FINAL STATEMENT OF THE FOES LIMITED WARRANTY. FOES DOES NOT AUTHORIZE OR ALLOW ANYONE, INCLUDING FOES DEALERS OR RETAIL BICYCLE OUTLETS, TO EXTEND ANY OTHER WARRANTIES, EXPRESSED OR IMPLIED, FOR FOES. NO OTHER REPRESENTATION, AND NO STATEMENT FROM ANYONE BUT FOES, INCLUDING A DEMONSTRATION OF ANY KIND BY ANYONE SHALL CREATE ANY WARRANTY REGARDING THIS FRAME OR FORK. ALL OF THE REMEDIES AVAILABLE TO THE ORIGINAL OWNER ARE STATED HEREIN. IT IS AGREED THAT FOES LIABILITY UNDER THIS LIMITED WARRANTY SHALL BE NO GREATER THAN THE ORIGINAL PURCHASE PRICE AND IN NO EVENT SHALL FOES BE LIABLE FOR INCIDENTAL OR CONSEQUENTIAL DAMAGES.

DISCLAIMER

All other remedies, obligations, liabilities, rights, or warranties, expressed or implied, arising from law or otherwise including, but not limited to, any claimed implied warranty of merchantability, any claimed implied warranty arising from course of performance, course of dealing or usage of trade, and any claimed implied warranty of fitness, are disclaimed by Foes and waived by the original owner. Some states, jurisdictions, countries, and provinces do not allow some or all of the limitations set herein or the exclusion or limitation of incidental or consequential damages. If any provision is found enforceable, only that provision shall be stricken and all others shall apply. This limited warranty does not provide the original owner with certain legal rights and recourse, and the original owner may possess other rights or recourse, depending on the state, jurisdiction, country or province.

WARNING: BICYCLE RIDING MAY BE HAZARDOUS TO YOUR HEALTH, AND EVEN FATAL! ALWAYS WEAR A HELMET AND PROPER PROTECTIVE CLOTHING.

GENERAL SETUP

CAUTION! YOU WILL DAMAGE YOUR FRAME AND SHOCK IF YOU DO NOT CORRECTLY SET UP AND MAINTAIN YOUR REAR SHOCK. DO NOT OPERATE YOUR FRAMESET UNTIL READING AND UNDERSTANDING THIS MANUAL.

SHOCK AIR PRESSURE WARNING

It is imperative that you check your shock's air pressure to prevent bottoming before each ride. Allowing the shock to bottom repetitively stresses the shock, as well as the frame, and shortens the life of the frameset.

WARRANTY

Hydro has a 2 year limited Warranty from manufacturer's defects, and the Curnutt Shock has a 1 year limited warranty from manufacturer's defects. A detailed explanation is contained in the Foes/Curnutt Warranty addendum. Please read this addendum to fully understand the explanations and limitations of the Foes and Curnutt warranties. Please see the Fox Warranty Manual for a complete description of warranty and support of Foes owners with Fox Shocks.

FOES SPECS FOR BUILDING

FOES FRAME SPECS FOR BUILDING

- Bottom Bracket Width: 83mm shell
- Seat Post Diameter: 31.6mm
- Head Tube Diameter: 1.5"
- Fork Type/Length: The Hydro was designed around a 8.5" to 8"travel fork, single or dual crown
- Front Derailleur: None
- Rear Hub Spacing: 12mm through axle w/ 150mm hub spacing
- Disc Brake: The Hydro accepts a standard I.S. rear caliper mounted on the swingarm. Use of larger rotors requires the appropriate manufacturer-sized caliper adapter.
- Chain Guide System: ISCG05,Call Foes for options
- Rear Tire - Max Recommended Size: 2.5"

MINIMUM - MAXIMUM SEAT POST INSERTION

In addition to the minimum seat post insertion mark on most seat posts, you must follow the following recommendations for seat post insertion: a 31.6mm seat post must be inserted a minimum of 4” into the seat tube. Anything less than this will not be covered under warranty. ***Important: Do not insert seat post further than 7.5” - you may not get it back out!***

REPLACEABLE DERAILLEUR HANGERS

Foes Hydro is equipped with a replaceable derailleur hanger. This part is installed as a safety feature, as well as a convenience to you, the owner. It is not uncommon for foreign objects, such as sticks, stones and other debris to bend your hanger. A bent hanger can occur from shifting hard under loads, crashes, branches, or transporting your bicycle. Foes derailleur hangers are designed to bend and break!

This inherent design actually keeps more expensive damage to your swingarm from occurring. If these were stronger and more resistant to bending and breaking, there is a good chance that these forces would bypass the hangers and destroy the dropout area of the frame. Derailleur Hangers are available from your Foes Dealer for a nominal fee, and are not covered under any of the Foes warranties. It is a good idea to purchase an extra hanger or two to prevent a breakage from interrupting your riding time. The part number for the derailleur hanger for the Hydro is HA01.

CURNUTT XTD COIL SHOCK SET-UP

Read all of the following instructions before making adjustments!
Congratulations on purchasing the finest rear shock ever produced for mountain bikes. Curnutt has introduced all new technologies to control damping in your new shock. Consequently, you should disregard all that you “know” about how shocks work when setting up your Hydro Curnutts neither work, nor feel, like any other damper on the market and so it is particularly important to read this manual through thoroughly before riding or adjusting your Curnutt.

BASICS

The following sections devoted to shock set-up pertain to the *Coilover* only - please see the XTD AIR Shock Addendum if you have the Curnutt AIR. There are three main types of adjustments that you can make to your Curnutt, whether it is XTD Coil or Air: **Spring Preload, Bottoming Control** (and ancillary compression damping)**, and Rebound Damping**. Again, these instructions pertain only to the XTD Coilover shock - Please refer the Curnutt Air Shock Addendum for tuning the AIR Shock.

Spring Preload, or just preload, is the amount of squish adjusted into your shock’s spring via the adjuster/lock ring found on the top part of the spring. Preload, in turn, controls the amount of rear wheel ‘sag’ that your bicycle has at the neutral or ‘ready for bump’ position. Sag allows your shock to absorb negative forces, like pot holes and jumping, that extend the shock - not just the positive forces that compress the shock. Having the proper sag will enable your shock to be ready to absorb these negative and positive forces found on the trail with aplomb. Your Preload comes set according to your specs from the factory. However, once you have gone through the break-in period and you have some experience with adjusting the other settings (Bottoming Control and Rebound), it is normal for riders to test using more or less preload (sag).

SETTING TOTAL SAG

Sag can be measured at the rear wheel’s axle or at the shock. These instructions approach this measurement at the shock. Your XTD Shock should have 7/8” of shock stroke sag when the rider’s full weight with gear is at rest on the bicycle. The best way to do this is to have someone check the total length of your shock, eye to eye, while you are feet on the pedals and balanced on the bike on level ground. You can use a nearby wall to assist you in your balancing… but don’t lean or bounce – this will give a false measurement. Next (or first), measure the length of your shock at rest without the rider. The difference of these two measurements is your sag.

To adjust the sag you must adjust the spring’s preload. This is done by turning the spring Preload Ring. To get more sag turn the ring counter-clockwise (this will extend the spring). To get less sag turn the ring clockwise (this will compress the spring). Only through spending the time testing and re-testing will you get proficient at sag setting and determining what setting works best for YOU. Foes recommends that you do not touch your sag until you are very familiar with how your rear suspension works and feels. After some famiarity with it, Sag can be checked when the rider weight with gear, or the technicality of the terrain, changes over 5%. *Warning... If you find that you are using more and more preload (or fine or coarse ramp adjustment) to prevent bottoming, your Curnutt may need to be serviced.*

DETERMINING PROPER SPRING RATE

Proper spring rate is the one that allows you to make adjustments in Damping and Rebound to achieve effective overall bump compliance and bottoming control described in this manual. If your rear suspension is not behaving the way this manual describes, you may contact our suspension techs to procure advice. To test for the proper spring rate follow these steps:

SPRING RATE - RIDER WEIGHT CHART

HYDRO spring Rate in lbs	Rider Weight with Gear in lbs
200	120 - 140
250	140 - 150
300	150 - 170
350	170 - 190
400	190 - 210

While the shock is fully extended, loosen the preload adjuster ring until it no longer touches the spring. Tighten until the preload adjuster first touches the spring. Using a felt tip marker, like a Sharpie, put a mark on the spring, and another on the shock body next to the first. This will help you determine exactly when one full turn of the preload adjuster has been made. If less than one full turn of the preload adjuster is used to obtain the proper length of sag (1") the spring rate is too heavy, and the next softer spring rate should be used. If more than four full turns are needed to achieve the proper sag, the spring rate is too light, and the next firmer spring rate should be used. Never use more than five full turns of preload. Riding with the improper spring - either too firm or too light - can encourage stress cracks and in some cases, frame failure. *DON'T DO IT!*

BOTTOMING CONTROL

Since your Curnutt was actually built, valved, sprung and pre-loaded according to your specific rider weight, skill level and type of riding you mostly enjoy, your Curnutt shock is about 95% tuned to you right from the factory. The other 5% will be the Bottoming Control, and tuning your Rebound Damping. This section will speak to Bottoming Control and the air pressure that affects it. Rebound Damping will be addressed in a following section. Your Curnutt XTD Shock is a true fluid–damped, coil-over shock which, uniquely, uses air pressure to control bottoming (as well as reduce fluid foaming). The range of air pressure needed inside your Curnutt XTD is between 65 and 100 psi. This means, between these minimum and maximum pressures lies an ideal setting for the control of bottoming the rear suspension over a given terrain. As said initially, your shock's compression damping is mostly set for you at the factory, yet, adjusting the air pressure will tune your shock's ability to resist bottoming – an important feature for the life and longevity of your Curnutt Shock and Foes Frame. **Do not exceed 100 psi or run the shock with less than 50 psi!**

HOW TO CORRECTLY PUMP YOUR SHOCK

To get the correct pressure in your shock it is important to follow some guidelines. Thread the pump's connector onto the Schraeder valve on the shock. Pump to the desired pressure. Quickly unthread the connector from the Schraeder valve until the connector breaks free. The pressure you have in your shock is the one you pumped to. At this point do not re-attach the pump to check your setting, as it will be inaccurate. This is due to some of the shock's air rushing into the pump's hose, making the reading wildly incorrect.

CURNUTT SHOCKS

2:1 Hydro

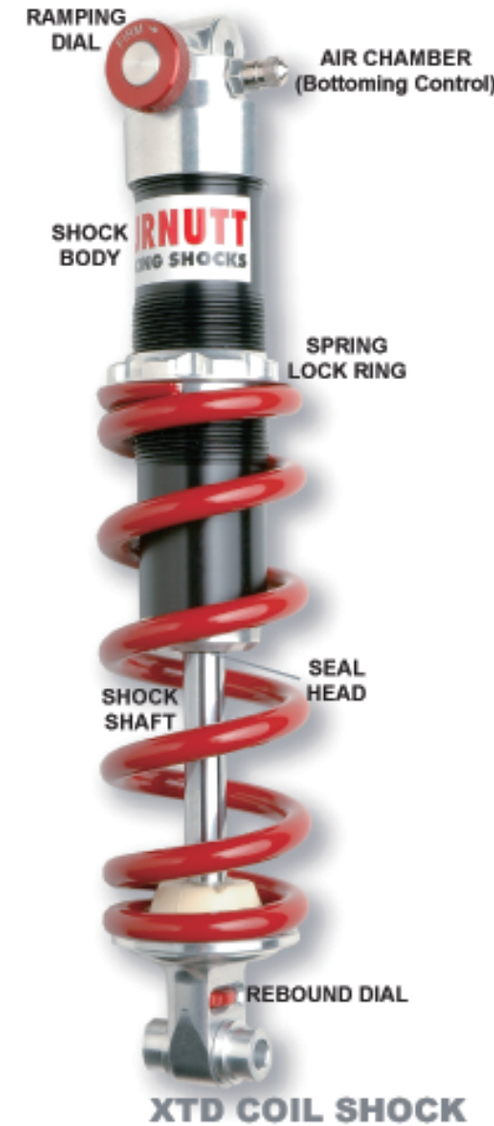

XTD COILOVER

BOTTOMING RESISTANCE - COARSE TUNING

Compression Damping is your shock's ability to absorb the bumps and obstacles found on your ride or race, and is mostly set at the factory to your specs. Optimum compression damping includes your shock being able to use all of its travel (8") over the entire range of obstacles and terrain found on a typical ride - yet, not bottom repetitively! Once you have broken-in your bicycle, it is normal for your Curnutt to bottom once in a while on the course - this will not damage your shock. However, the repeated bottoming of your shock during a ride is indicative of too light of a spring rate or too little air pressure in the bottom-out chamber, and will eventually damage the shock's seal head and lead to other maladies, such as the coil-binding of your spring and the transmission of unwanted energies through your frame, increasing the likelihood of stress cracks. Therefore, it is very important to maintain the optimum air pressure inside your shock before each and every ride.

Assuming that your shock has the correct spring rate and sag, controlling bottoming of your XTD rear suspension is achieved by air pressure in your shock. But, before you adjust this, it is best to adjust the fine tuning Ramping Knob to its middle adjustment (2 turns 'out'). Please read the next section, XTD BOTTOMING CONTROL - FINE TUNING now, to do this, and then return to this next paragraph...

Too little air pressure and your shock will bottom too easily. Too much air pressure and your rear suspension will not bottom, but it can become harsh and stiff. This is because, as well as controlling resistance to bottoming (the last one-fourth of your shock's travel), air pressure can also affect damping in the first three-fourths of the shock's travel, effectively reducing small bump compliance if used too much. That is, as you increase your air pressure to control bottoming, this will stiffen the shock over the entire stroke, to some degree. The point is… there are diminishing returns when you increase air pressure to control bottoming, and these returns result in shock stiffness. The best air pressure is the least amount that will yield consistent bottoming resistance. Foes recommends an initial setting of 65 psi, yet, your optimum setting for each course or trail will avail itself only by riding and testing different pressures over the same terrain. NEVER GO UNDER THE 50 PSI!

XTD BOTTOMING CONTROL - FINE TUNING

Once you have your 'optimum' air pressure introduced, you may fine tune your bottoming control using your XTD Ramping Dial (see picture on page 5). There are four full turns of adjustment but is best to start in its middle

setting, or, 2 turns from seated. Here's how to get there: Turn the dial 'in' clockwise till it stops - this is the 'seated' position. Now, turn the dial 'out' counterclockwise 2 full turns. You are now it the 'middle' position, and have two turns of adjustment - either way! If there is any doubt where your adjustment is set, *START OVER* and turn the knob clockwise until it stops (the seated position), and then back it out as necessary to a maximum of four counter-clockwise revolutions from seated.

VERY IMPORTANT! DO NOT TURN THE RAMPING KNOB PAST 4 TURNS FROM SEATED – THIS CAN FORCE THE COMPENSATOR ACTUATOR OUT OF ITS PRESSED-IN POSITION, AND WILL REQUIRE A FOES TECHNICIAN TO PRESS IT BACK IN, POSSIBLY LEADING TO A NON-WARRANTIED REBUILD OF THE SHOCK.

If, at your present air pressure, you are happy with the overall ride and sensitivity, but are never using all of the travel, turn the Ramping Adjustment Knob counter-clockwise 1/2 turn at a time. This will allow the XTD to use more of the stroke. If you are bottoming out, turn the Ramping Adjustment Knob clockwise 1/2 turn at a time to stiffen the last part of the shock's stroke. If you are bottoming consistently when the Ramping Knob is seated, then introduce more air pressure using your hand pump - 5 psi at a time. Then, re-test. You will have to do some air pressure-ramping adjustment tests to get a feel for the optimum adjustments for both.

Higher air pressures will result in improved pedaling efficiency (anti-bob). Don't mistake this for stiction! – it is supposed to ignore small bump or rider input. This is what makes 'anti-bob' or 'stable platform' possible.

EXCEEDING 100 PSI COULD RESULT IN SHOCK FAILURE... DON'T DO IT!!!

Once you find an acceptable setting, never think this is the final adjustment. Some courses/terrain have more pedaling sections (higher pressure), some may have 'chatter' bumps (lower pressure), and some may have excessive big 'hits' and landings (higher pressure and more Ramp). Consider the Curnutt XTD Shock and adjustments a tool easily customized to meet your course needs.

REBOUND DAMPING - XTD

Rebound Damping is your shock's ability and speed to get back into its neutral position (sag setting) to accept another compression or bump. Rebound damping is sometimes more correctly referred to as rebound speed, and is controlled by the red knob found at the bottom of your shock. The knob has an **'S'** for Slow and an **'F'** for Fast etched into its face. The

knob has a range of 3 full turns. Turning the knob all the way 'in' – clockwise – is the slowest setting. From this 'seated' position, turning the knob 'out' – counterclockwise – 4 complete turns will put you at the fastest rebound setting. Dialing your rebound to a medium setting (2 turns from seated) is a good way to start. From there you can test different settings (1/2 turn at a time) over the same set of obstacles. Please note that, by design, Curnutt shocks rebound progressively more slowly than standard shocks as they reach the end of the rebound stroke (neutral sag setting). So, in the first ½ of the stroke rebound will be faster, and in the last ½ of the stroke the rebound will progressively slow. This feature – impossible for standard shocks – makes your ride incredibly smooth and mostly free from pedaling interruptions.

Your appropriate rebound speed setting is, basically, dependent on two variables: 1) the contour of the terrain, and 2) the speed with which you ride over this terrain. The faster you ride over obstacles, the faster your rebound will have to be. If you find your rear wheel bouncing, you should slow your rebound, as your shock is expanding back to its neutral position too fast. If you find that your rear suspension is still too harsh, it *may* be that your rear wheel is not rebounding back into its neutral position fast enough for the next consecutive bump. This is called 'packing', and it forces the shock to remain in, or near, the compressed or 'packed' position, un-ready for the next obstacle - so speed up the setting. The correct setting is the 'fastest' one that allows the rear wheel to neither bounce, nor pack. Your correct rebound setting will become obvious by testing various settings over the same set of obstacles at nearly identical speeds.

SPRING RATES

We develop "proper" spring rates and valving for your shocks from many factors - riding weight, type of riding, personal riding style, as well as testing information we develop over the course of the season. Therefore, Foes recommends that you ask our Curnutt shock technician for his recommendations on spring rates when you feel you need to change.

Since Curnutt valves its shocks for rider weights as well as spring rates, changing your spring rate may not be as simple as just changing your spring. You may have to have a Curnutt Technician change the valving for the different spring rate, also. Please call Foes for any spring rate changes to your shock - we can get you set up properly. Some spring changes, without a valving change, can be dangerous, as the rebound action can become uncontrolled, making riding over larger obstacle dangerous.

How to set up E-thirteen LG1+ChainGuide for ,Hydro Shown with SHIMANO SAINT [FC-M815-1]

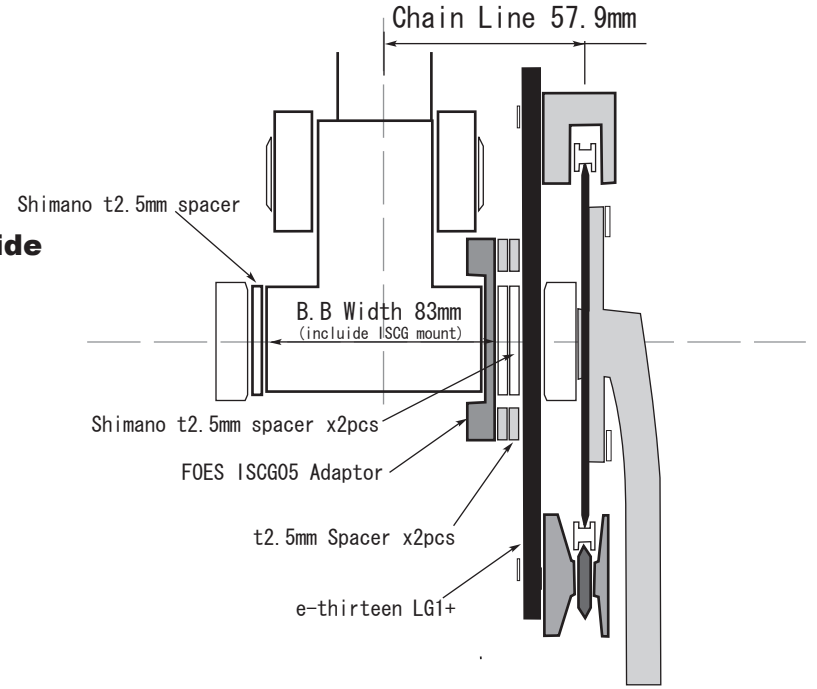

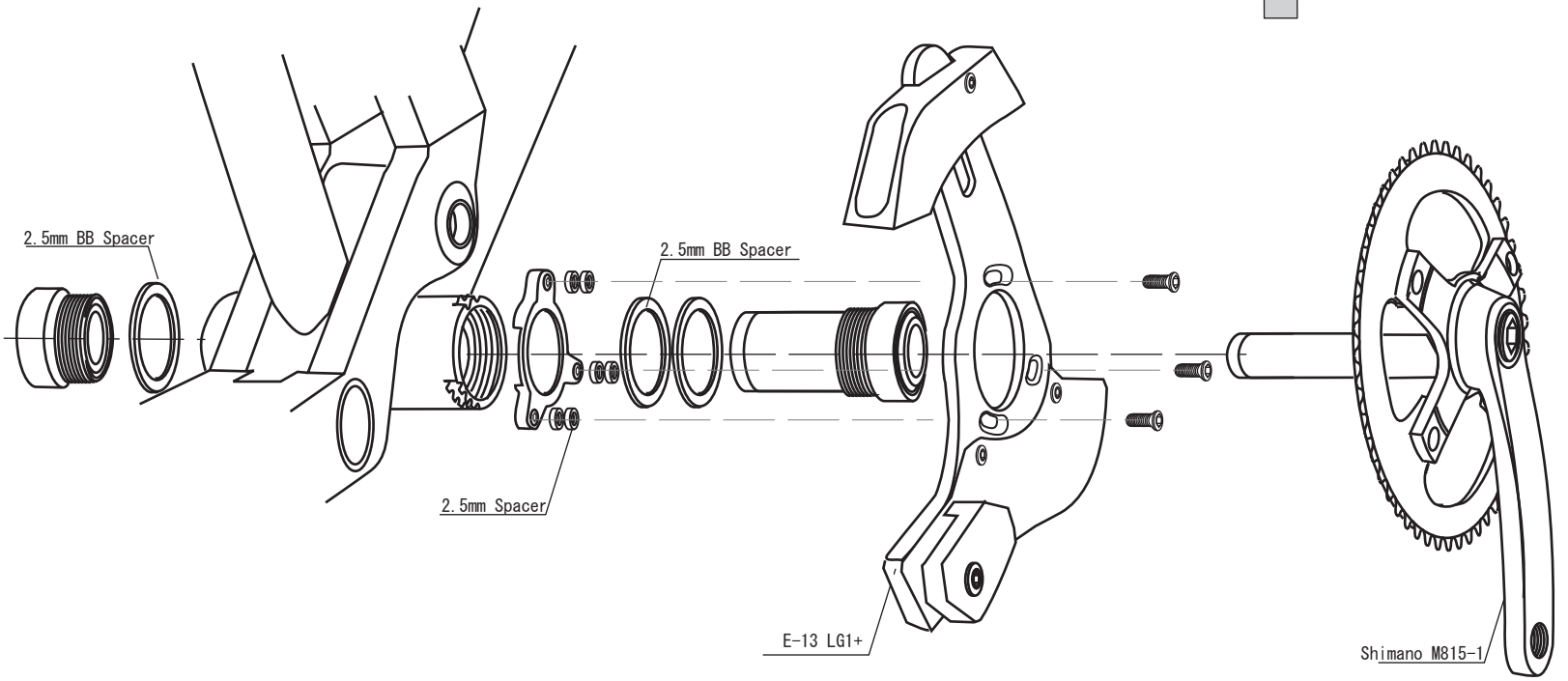

FOES FABRICATIONS INC. 62N.Sierra Madre Blvd.Pasadena CA 91107 USA www.foesracing.com Tel:626 683 8368 Fax:626 683 8622

HYDRO- FOX DHX RC4 10.5” X 3.5” / 267mm X 89mm

Your frame accepts a 10.5” x3.5” shock.
We can’ t warranty damage caused by use of an incorrect other shock.
Please contact the shock manufacture if you have any warranty issues with your shock.

SETUP OVERVIEW The DHX RC4 employs both speed sensitive rebound damping and position sensitive compression damping. There are four external adjustments that affect the compression and one external adjustment for the rebound. The four compression adjustments are the Bottom Out Resistance, Boost Valve, High Speed Compression, and Low Speed Compression. Bottom out resistance affects the final part of the compression stroke, Boost Valve provides position - sensitive end stroke damping; this allows for a seamless transition from small bumps to big drop bottom-outs. The Low Speed Compression adjuster affects the compression damping during slow speed suspension movements, such as pedaling, g-outs or smooth jump landings and the High Speed Compression adjuster affects the compression damping during medium-to-fast suspension movements, such as steep jump faces, flat jump landings, and square edge bumps.

① BOTTOM OUT RESISTANCE The bottom-out adjuster has 4 turns of adjustment. This adjustment controls the bottoming resistance of the shock, meaning it controls the compression on the final part of the shocks stroke. The adjuster can be turned with a 3mm allen key inserted into one of the holes around the perimeter of the dial.

More Resistance -clockwise rotation
Less Resistance -counter-clockwise rotation

② BOOST VALVE The DHX RC4 has an air pressure range of 125-200 psi, and it must be pressurized. The boost valve allows for seamless transition from small bumps to big drop bottom-outs.

For more bottom-out control, add 10-15 pounds of air pressure, to a maximum of 200psi.
For less bottom out control, decrease the shocks air pressure by 10-15 pounds with the pump’ s bleed valve, to a minimum of 125 psi

Warning: Never ride your bike with more than 200 PSI, or less than 125 PSI in the reservoir air chamber. Doing so can damage your shock and require repairs that are NOT covered under warranty

③ LOW SPEED COMPRESSION The LSC adjuster has an 18 click range of adjustment that is able to be adjusted by hand. The LSC adjuster primarily affects the compression damping during slow speed suspension movements.

More low-speed compression damping - Clockwise rotation
Less low-speed compression damping - Counter-clockwise rotation

④ HIGH SPEED COMPRESSION The HSC adjuster has a twelve click range that can be adjusted by inserting a 2.5mm allen key into one of the angled holes. The HSC adjuster mainly affects the compression damping during medium-to-fast suspension movements.

More high-speed compression damping – Clockwise rotation
Less high-speed compression damping –Counter clockwise rotation

⑤ SAG SETUP Use 25-30% percent of the shocks stroke for trail use.
To determine sag, first measure the distance between the centers of each shock mounting bolt (eye-to-eye) and record this number. Make sure you have the correct spring for your weight.
HYDRO eye-to-eye 10.5” / 267mm
Next, sit on the bike and record the new eye-to-eye measurement. Subtract the static eye-to-eye measurement and you get your sag in inches. An easy way to calculate sag is to multiply the shock travel by your desired sag percentage.
HYDRO stroke 3.50” / 89mm

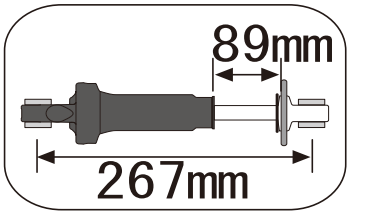

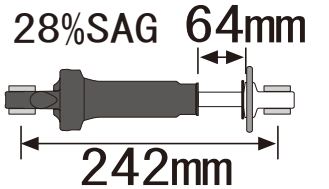

⑥ REBOUND Rebound controls the rate at which your shock returns after it has been compressed. The proper rebound setting is a personal preference, and changes with rider weight, riding style, and conditions. A rule of thumb is that the rebound should be as fast as possible without kicking back and pushing the rider off the saddle. The rebound has approximately 15 clicks of adjustment. For slower rebound, turn the red adjuster knob clock wise. For faster rebound, turn the red adjuster knob counterclockwise.

SPRING SETTINGS [Reference Data]

Rider Weight (lbs)	120	130	140	150	160	170	180	190	200	210
(kg)	55	59	63	68	73	77	82	86	90	95
Spring Chart (in/lbs)	200	200	250	250	300	300	350	350	400	400
Boost Valve (psi)	125	130	140	140	150	150	160	160	170	180

SAG SETTINGS

Sag %	25	30
Eye to Eye (mm)	245	240.

*EXTERNAL ADJUSTMENTS

Rebound	6 Clicks
Bottom-Out Control	0 Turns
High speed Compression	Position 0
Low speed Compression	6 Clicks

*All clicks and turns are counted clockwise, rotating from the all the way out or counter-clockwise dial position.

MAINTENANCE

Following these guidelines will help maintain the performance of your bicycle and prevent more serious problems from arising.
It is important to remember that service intervals can vary depending on climate, trail conditions and riding frequency.

ACTION	WEEKLY	MONTHLY	3 MONTHS	ANNUALLY
Clean and lube chain	■			
Check tire pressure	■			
Clean bike of mud and debris (never spray water directly into frame or components)	■			
Check brake function	■			
Check shock pressure, if applicable	■			
Check for loose bolts and tighten, if necessary	■			
Check headset and tighten / loosen, if necessary		■		
Thoroughly clean pivot points with a rag (do not lubricate)		■		
Replace brake pads, if necessary			■	
Check tires for wear			■	
Check spoke tension and retention, if necessary			■	
Check chain for worn, damaged, or loose links, replace chain if necessary			■	
Complete tune-up performed by an authorized FOES dealer				■

TORQUE

We have attached a brief list of torque specifications for bolts and components that may need to be tightened while performing basic maintenance. This is just a guide. For specific torque, specifications, please contact the component manufacturer directly.

B.B cups	300 - 360		
Pivot Bolts	125 - 150	Shock Bolts	80 - 95
Seatpost Binder Bolt	150 - 180	Disc Attachment Bolts	45 - 55
Saddle Clamp Bolts	175 - 250	Discbrake mounting Bolts / Adaptor Bolts	100 - 110
Rear Derailleur	70 - 86	Derailleur Hanger Bolts M4	25 - 30
Front Derailleur Clamp	45 - 60	Handlebar Binder Bolt	150 - 180
Chainring Bolts	88 - 132	Stem Binder Bolt	175 - 260

Caution: The torque specifications listed should be used as a guide when performing maintenance. Technological advances have made bicycles and bicycle components more complex, and the pace of innovation is increasing. Because of these advances, FOES recommends that you refer to the torque specifications of the manufacture's component you are adjusting. In order to help minimize the chances of injury, do not perform any maintenance that you are no confident can be completed within your abilities.

ADRESS:62N SIERRAMADRE BLVD PASADENA CA 91107
FAX:1-626-683-8622

COSTMOR RESISTRATION FORM	
NAME :	
ADRESS:	
ZIP/ COUNTRY :	
PHONE:	
E-MAIL:	
SERIAL#:	
BIKE MODEL:	
SIZE /COLOR :	
PURCHASED PRICE:	
PURCHASED DAY :	
PURCHASED FROM :	
BUILT WITH :	

A FINAL WORD

Foes and Curnutt make the finest and toughest framesets and suspensions in the world, capable of standing up to the fastest pro riders and the most brutal courses in competition. But, what our frames don't hold up to is... ignorance, neglect and abuse. Many of the frames, shocks and forks returned to Foes for "Warranty" issues are clearly problems due to ignorance of the important information contained in this instruction manual (and a little common sense).

Therefore, it is vitally important that you read this manual thoroughly, follow its instructions, ride your bicycle as was intended, maintain and respect your Foes frameset, and ask for help from our technical department when questions arise. Following these guidelines will allow you to get the most performance and longevity from your Foes and Curnutt products.

62N, SierraMadre Blvd, Pasadena CA91107 U.S.A.
Tel: 626-683-8368 Fax: 626-683-8622
www.foesracing.com
info@foesracing.com